Horizontal Baler

CRAM-A-LOT®

J.V. Manufacturing, Inc.

Solid Waste & Recycling Equipment

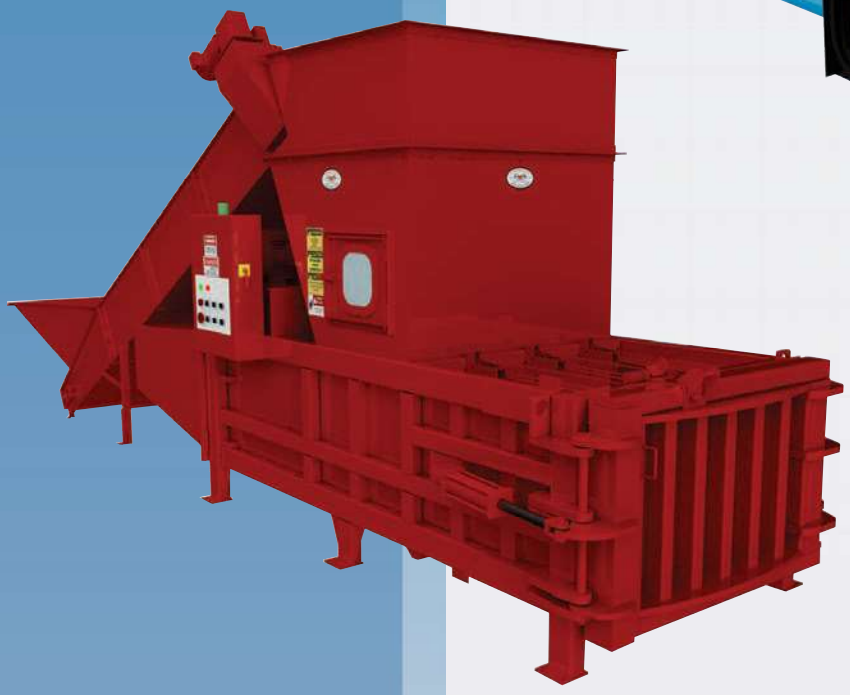

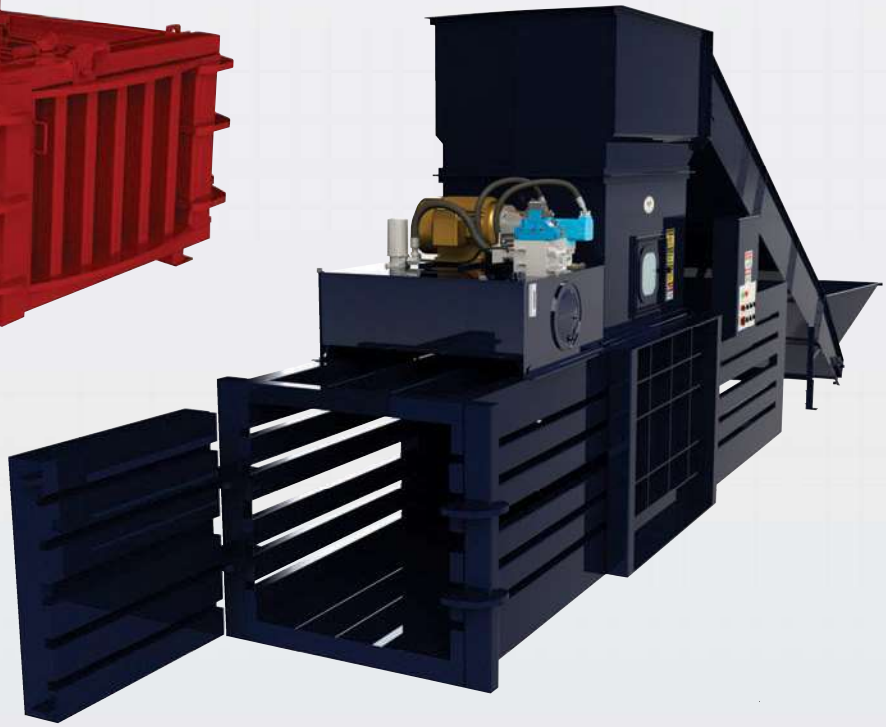

WASTEC MEMBER

PRSM

GSA Federal Supply Service

"Equipping The World For A Better Environment"

Features

Our range of Horizontal Balers are high performance machines designed to process a variety of recyclable materials into high density bales.

THESE POWERFUL UNITS ARE IDEAL FOR:

- Recycling Centers
- Distribution Centers
- Factories & Industry
- High Volume Material Generators
- Material Recovery Facilities

New for 2013 H2R AUTO TIE

DESIGNED FOR:

- Baling a Variety of Materials
- High Volume Processing
- High Density Bales
- Safe & Efficient Operation

HX SERIES CLOSED END

The HX series closed end balers are superbly suited to Distribution Centers and Industrial applications where large volumes of single material types are being processed, including cardboard, shrink wrap, newsprint, and cloth.

HE-60 "BIG MOUTH"

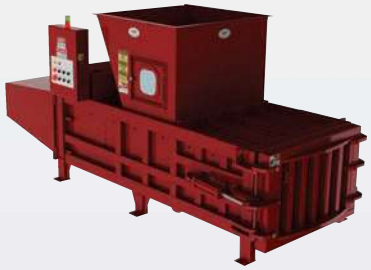

This full penetration, wide mouth baler is ideal for recycling centers that are processing a variety of material types, including OCC, PET, aluminum cans, and shrinkwrap. This baler produces a 60" x 30" x 48" mill-ready bale, and can produce undersized bales if required.

H2R-60 AUTO TIE NEW!!

The H2R-60 is the flagship of the Cram-A-Lot range of horizontal balers. This two ram, auto tie baler is designed for Material Recovery Facilities, Recycling Centers, and Distribution Centers that need to process high volumes of recyclables daily. The auto tie feature reduces labor costs and increases throughput.

MATERIAL HANDLING SOLUTIONS

We offer a variety of custom engineered material handling solutions to feed your horizontal baler easily and efficiently, including standard conveyors, pit conveyors, tippers, and custom designed carts.

Installed Applications

CRAM-A-LOT®
J.V. Manufacturing, Inc.
Solid Waste & Recycling Equipment

HE-60 with Walk-on Dock Mount

H2R-60 with Conveyor

HX-72 with Over the Back Conveyor

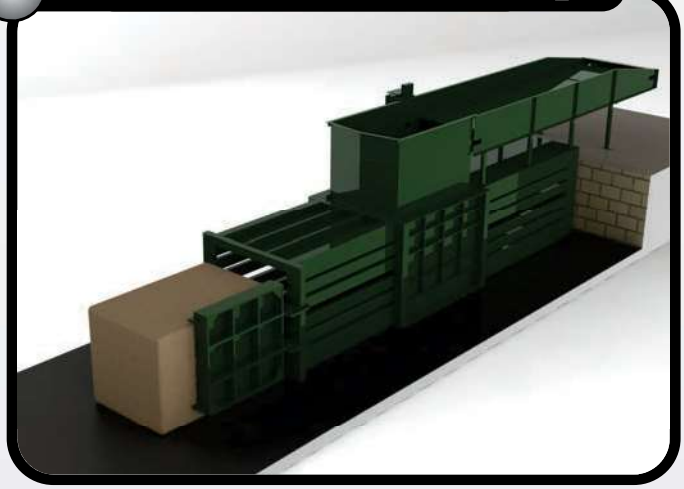

Walk-on Plateform & Remote Power Unit

HE-60 with Sorting Conveyor

HX-72 with Left Hand Open Hopper

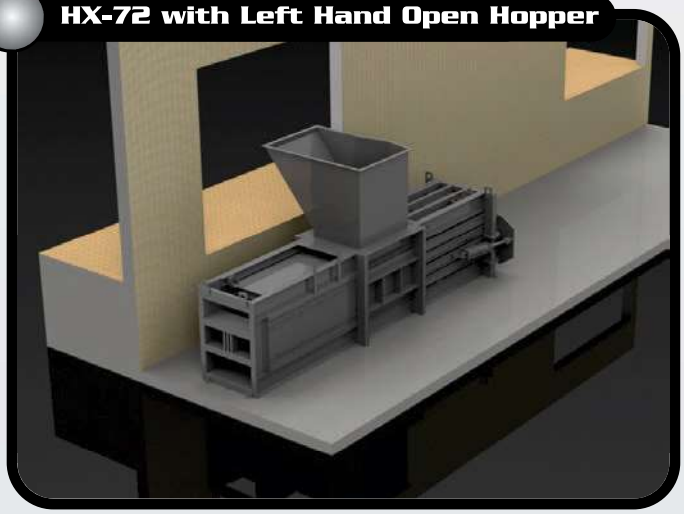

H2R Automatic Tie

The H2R-60 is designed for the medium volume processor who wants to minimize the labor associated with routine bale tie-off. The H2R-60 can process a variety of materials and produces a standard mill-sized 60" bale. Full penetration ensures high -density bales, the auto-tie feature ensures efficient operation.

FEATURES

- UL/CUL listed Control Panel
- Touch Screen Controls
- Electronic Dashboard
- Accent 470 Wire Tie System
- Automatic Bale Ejection System
- Auto-cycle with Photocell
- Name Brand Electrical & Hydraulic Components
- Oil Cooler

The Cram-A-Lot H2R Baler is designed for ease of installation, operation, & maintenance. This baler can process a wide variety of materials including OCC, newsprint, office paper, aluminum cans, PET bottles, shrink wrap, cloth, copper, brass and other non-ferrous metals. The H2R-60 features the smallest footprint in its class, and a throughput of 3 to 4 bales per hour (OCC).

DESIGN FEATURES

- Heavy Duty construction provides long service life
- Integrated Controls for Baler & Wire Tie System
- 9" High Performance Cylinder – Made in USA
- Automatic Cycle feature controlled by Photocell
- Guillotine Bale Separator
- Externally Adjustable, Serrated Shear Blade
- Tongue & Groove Floor in Charge Chamber
- Replaceable Liners
- Conveyor Feed Controls with Photocell
- Conforms to all current ANSI Z 245.5 safety standards

Integrated Touch Screen Controls

OPTIONAL FEATURES

- Control Pedestal with Casters
- Bale Slide Table
- Oil Heater
- Biodegradable Oil
- Custom Hopper Solutions
- 60" Standard or Pit Conveyor Systems

CRAM-A-LOT®
J.V. Manufacturing, Inc.
Solid Waste & Recycling Equipment

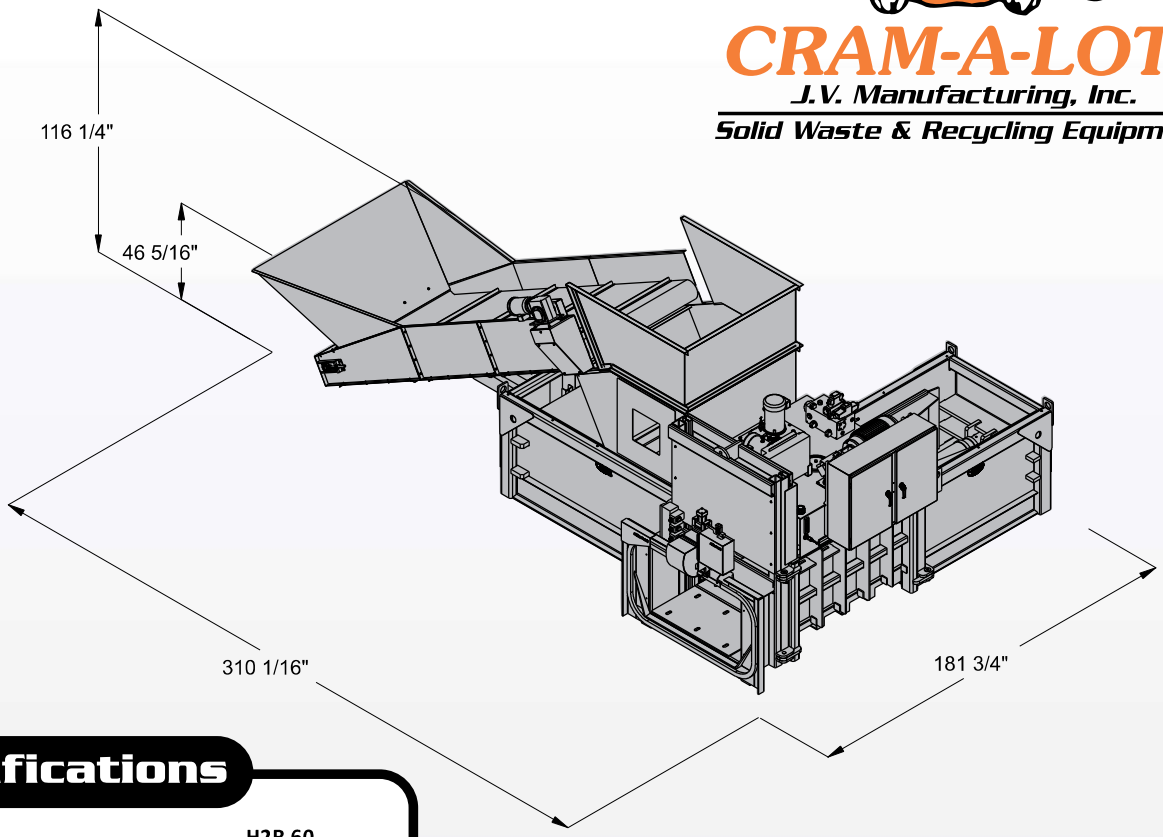

Specifications

Model		**H2R-60**
Nominal Bale Size	L	48"
	W	60"
	H	30"
Bale Weight Up to	(OCC)	1,400 lbs
Throughput	(OCC)	3.5 bales per hr
Main Cylinder	B	9"
	S	84"
	R	7"
Door Cylinder	B	3"
	S	30"
	R	1-3/8"
Motor		25 hp
Pump @ 1800 rpm		55 Gpm
System Pressure	Normal	2,850 psi
	Maximum	3,000 psi
Platen Force	Normal	181,217 lbs
	Maximum	190,755 lbs
Platen Face Pressure	Normal	101psi
	Maximum	106 psi
Cycle Time no load		26 sec
Unit Weight		30,000 lbs
WASTEC Rated Size		1.52 yd^3

Special modifications quoted upon request

All information is subject to engineering and/or other changes without notice

Conveyors

We offer several conveyor systems to meet your unique material handling needs. Available in 30”, 36”, 48”, & 60” width and legnths from 10ft to 32ft. Conveyors come equipped with 1 ½ or 2hp motors, 30:1 gear reducer, and PVC-120 roughtop belts. Cleated or uncleated belts are available.

HX with Dual Conveyor

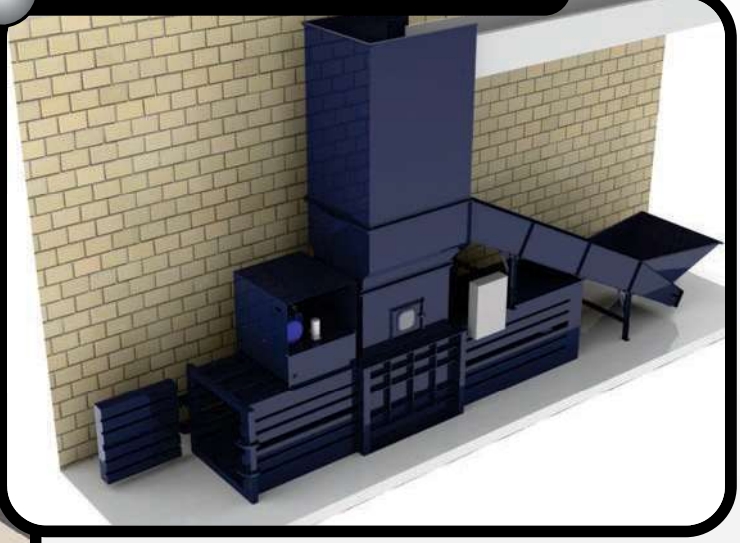

Sorting Conveyor

Sorting Conveyor

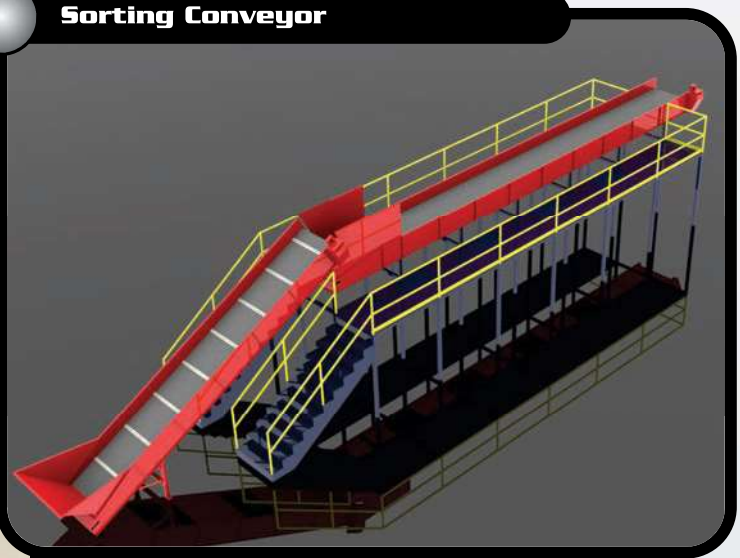

HE-60 with Pit Conveyor

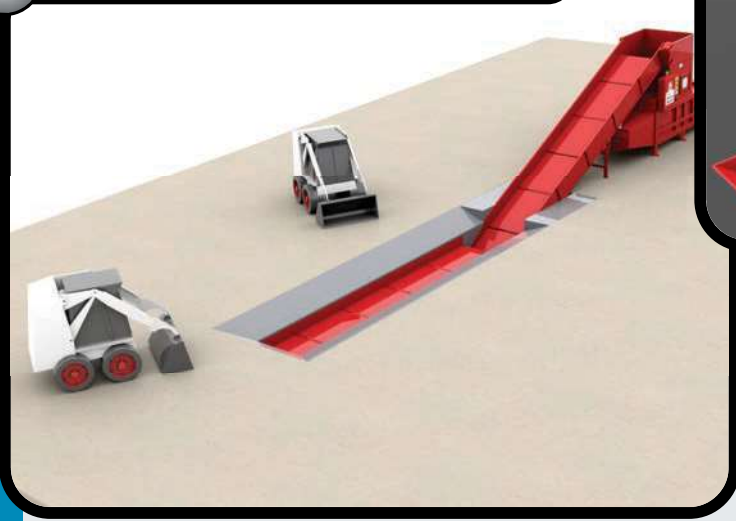

Specialty Applications

CRAM-A-LOT®
J.V. Manufacturing, Inc.
Solid Waste & Recycling Equipment

HX with Walk-on Platform

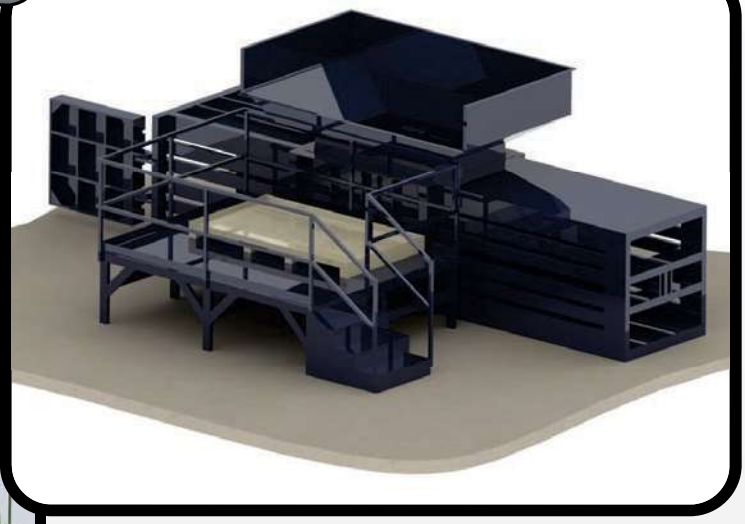

HE with Rear Conveyor & Tipper

HX with Rear Conveyor & Tipper

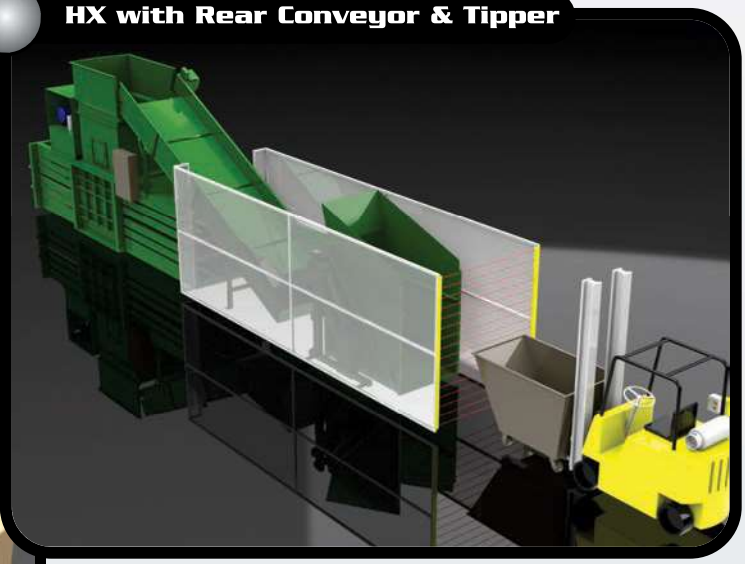

HX with Side Conveyor & Tipper

CRAM-A-LOT®

J.V. Manufacturing, Inc.

Solid Waste & Recycling Equipment

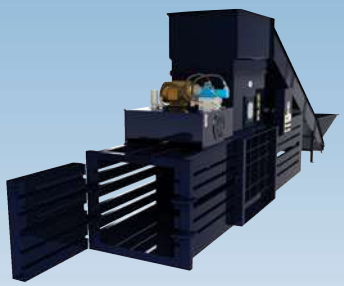

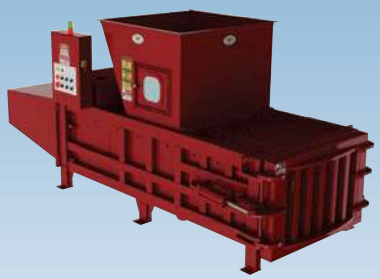

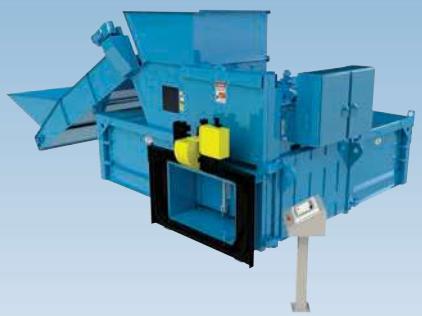

Leasing and Rental Programs Available

Compactor Units can be custom designed and factory installed to suit your special applications

Cram-A-Lot® 1-2-3 Warranty

J.V. Manufacturing will furnish without charge:

1) All parts and labor expenses through the first year of ownership to remedy any faults proven to be the result of defective materials or workmanship.
2) All parts through the second year of ownership to remedy any faults proven to be the result of defective materials or workmanship.
3) All labor expenses through the third year of ownership to remedy any structural faults proven to be the result of defective materials or workmanship.

This warranty does not apply to any damage caused by negligence, misuse, modifications, alterations, or accidents by purchaser or third parties.
Refer to operation manual for specific warranty coverage.

CORPORATE OFFICE

P.O. Box 229
701 Butterfield Coach Road
Springdale, AR 72765

1-800-678-7320
479-751-7320
479-751-7774 (fax)

DISTRIBUTED BY:

www.cram-a-lot.com